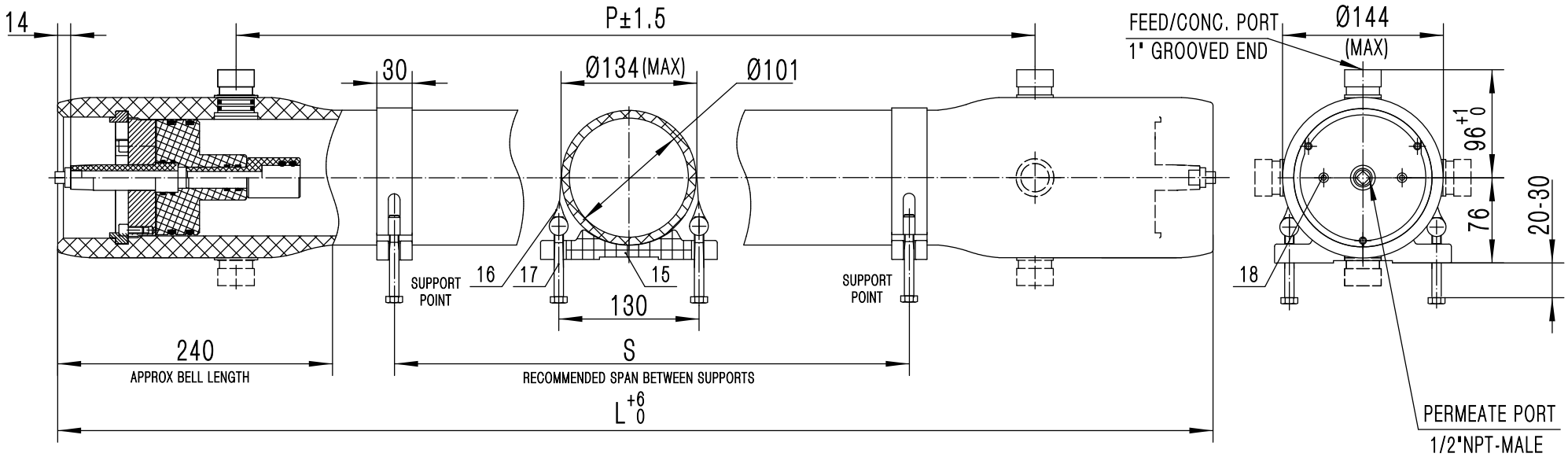

REF.	QTY.	PART NUMBER	DESCRIPTION	MATERIAL	REMARK
1	1	See Selection Table	Shell	Epoxy FRP	White
2	4	20002429	O-ring , Adapter	EPDM	
3	2	20002841	Sealing Plate	ABS	
4	4	20002659	O-ring , Head	EPDM	
5	4	20002430	O-ring , Permeate Port	EPDM	
6	2	20003326	Bearing Plate	Aluminium Alloy	
7	6	20000013 14 15	Locking Kit Segment	316SST	
8	6	20000205	Locking Kit Screw	304SST	M6x10
9	4	20000326	O-ring , F/C Port	EPDM	
10	2	20000392	Retaining Ring	304SST	
11	2	20000493	Feed/Conc. Port	2507SST	
12	1	20003046	Plug	PPO	
13	1	20003001	O-ring , Plug	EPDM	
14	2	20002845	Permeate Port	PPO	
15	2 ~ 3	20000003	Saddle	Engineering Thermoplastic.	
16	2 ~ 3	20003478	Strap	304SST-PVC	
17	4 ~ 6	20000200	Strap Screw	304SST	M8x70
18	4	20000439	Connecting Bolt	304SST	M6x25
19	4	20002478	O-ring , PWT	EPDM	
20	2	20002843	Adapter	PPO	

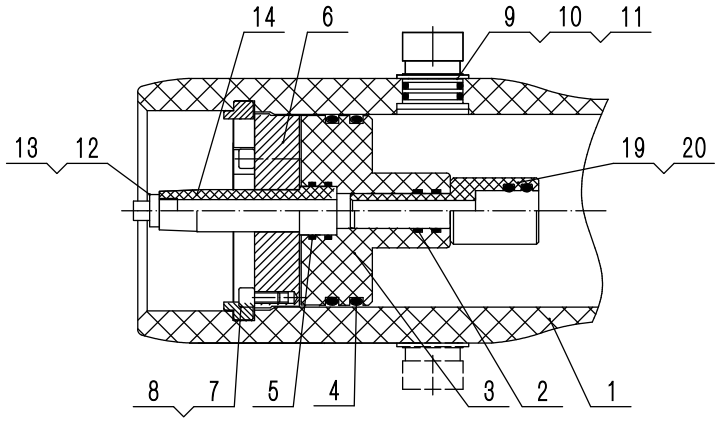

Ref.	Part Number	L (MM)	P (MM)	S (MM)	Approx Assembly Weight (KG)
1	R401200S-1	1364	1036	600	20
2	R401200S-2	2380	2052	1200	30
3	R401200S-3	3396	3068	2200	40
4	R401200S-4	4412	4084	1600x2	58
5	R401200S-5	5428	5100	2300x2	70
6	R401200S-6	6444	6116	2700x2	82

GENERAL NOTES:

1. DIMENSIONS IN MM.
2. MAX. ANGULAR VARIATION BETWEEN ANY PORT ±0.5.
3. DESIGN PRESSURE: 1200PSI.
4. DESIGN TEMPERATURE: Min.-7°C(20°F)-Max.65°C(149°F).
5. FOR OTHER TEMPERATURES OUT OF THIS RANGE CONTACT FIRST LINE .
6. CENTER VESSEL ON 2 OR 3 SUPPORTS AT SPAN"S": 2 SUPPORTS(FOR LENGTH 1-3), 3 SUPPORTS(FOR LENGTH 4-6) .
7. FOR VESSEL INSTALLATION AND MAINTENANCE PLEASE REFER TO FIRST LINE USER'S MANUAL.
8. FOR REFERENCE ONLY, NOT FOR CONSTRUCTION UNLESS CERTIFIED.

First Line International Environment Technology

First Line

Design	Model	R40-1200S
Date		
Review	DRG	R40-1200S-00-01
Date		
Approval	Unit	MM
Date	REV.	2026